TecCrete - 1250 Bare Panel with Air Seal

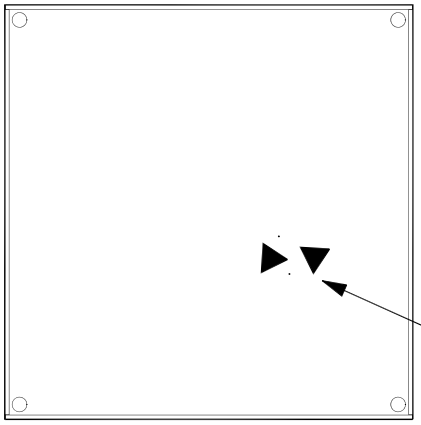

Top View

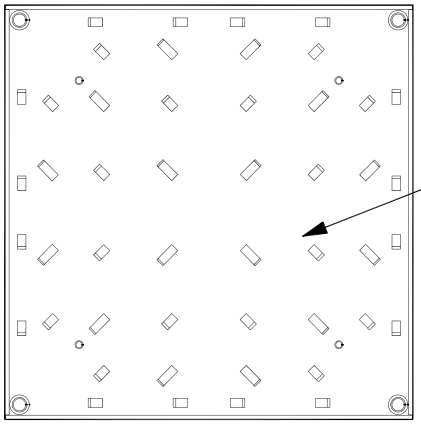

Bottom View

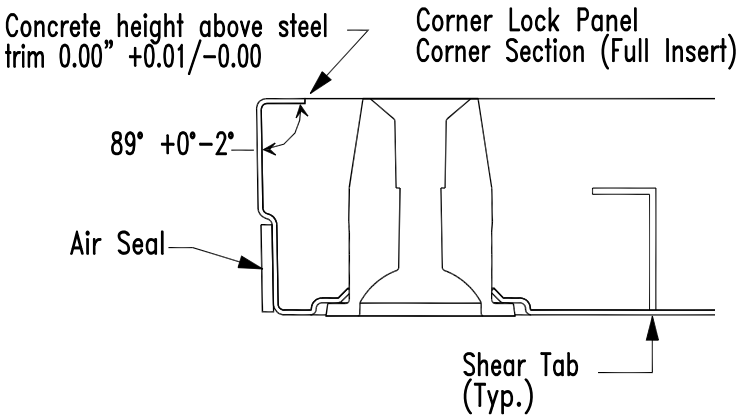

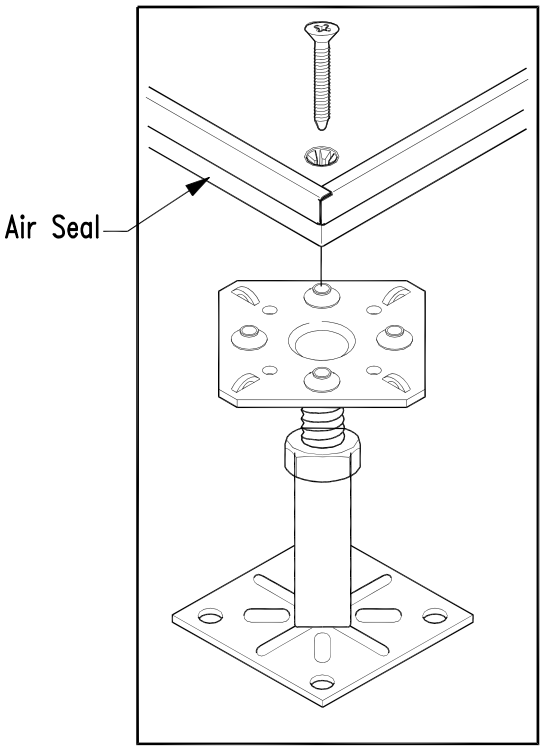

Typical TecCrete Corner Lock Configuration